4. Electrical Component Location

A: LOCATION

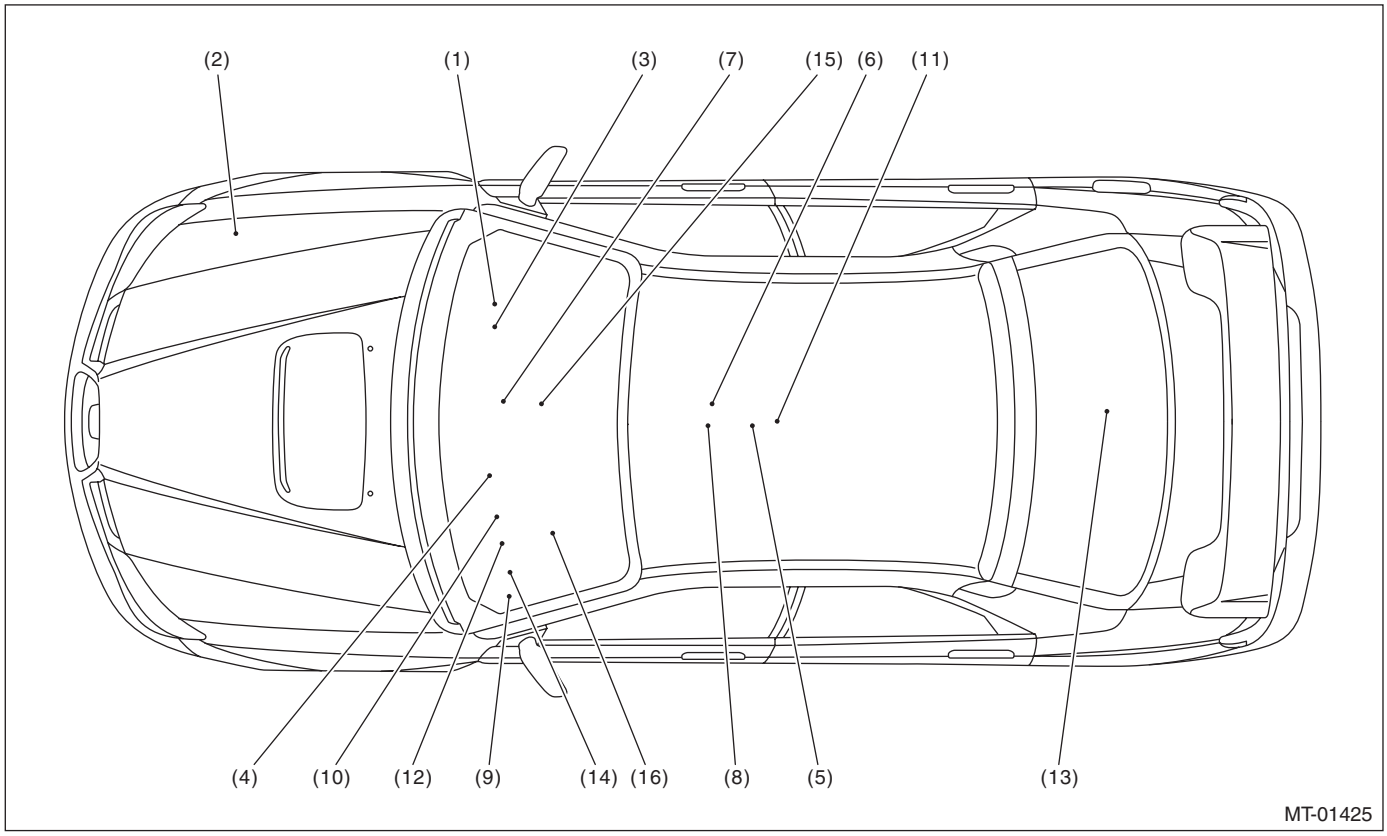

(1) Engine control module (ECM)
(2) ABS control module and hydraulic control unit (ABSCM&H/U)
(3) Driver's control center differential control module
(4) Accelerator pedal position sensor
(5) Yaw rate & lateral G sensor
(6) Center differential control dial
(7) Center differential
(8) Manual mode switch
(9) Driver's control center differential relay
(10) Driver's control center differential indicator light (driver's control center differential diagnosis indicator light)
(11) Parking brake switch
(12) Brake light switch
(13) Rear differential oil temperature switch
(14) Data link connector
(15) Neutral position switch
(16) Steering angle sensor

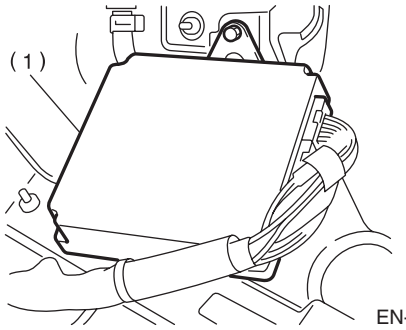

EN-00156

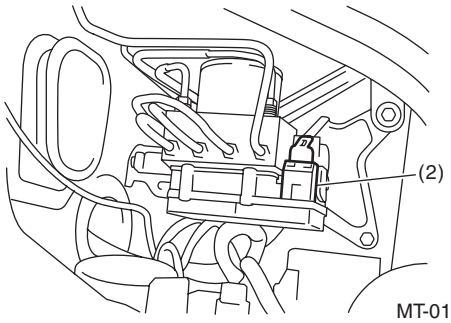

MT-01230

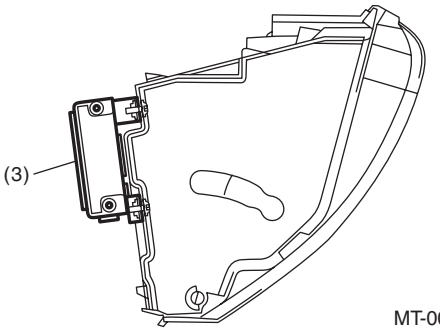

MT-00957

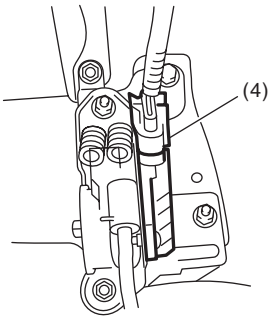

MT-00958

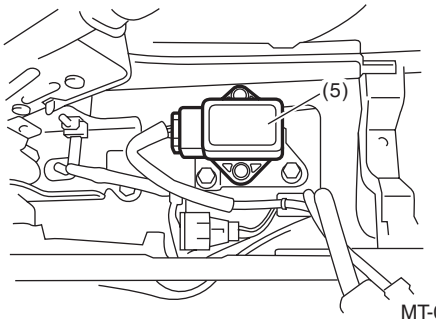

MT-01231

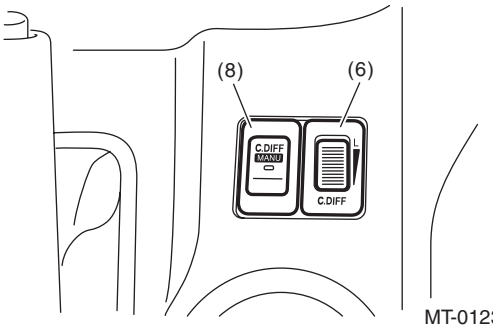

MT-01232

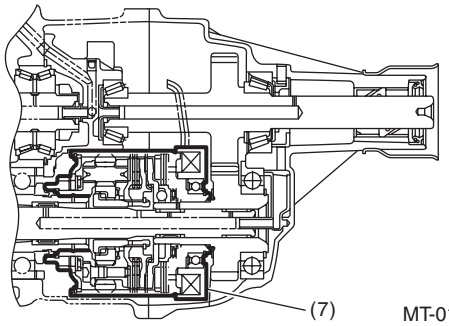

MT-01455

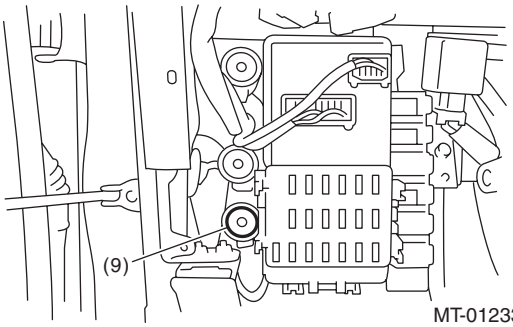

MT-01233

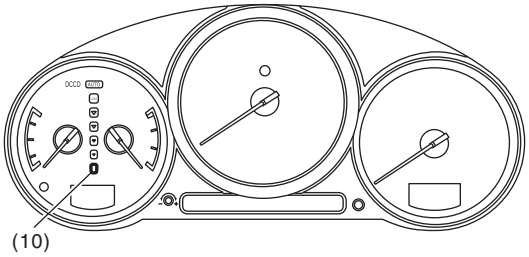

MT-00860

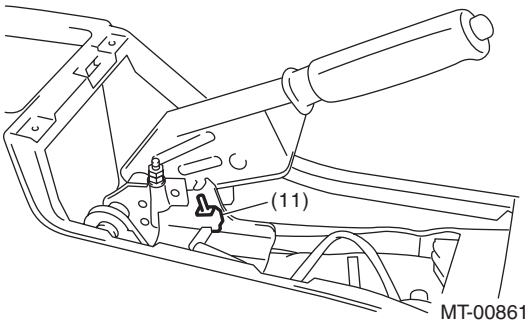

MT-00861

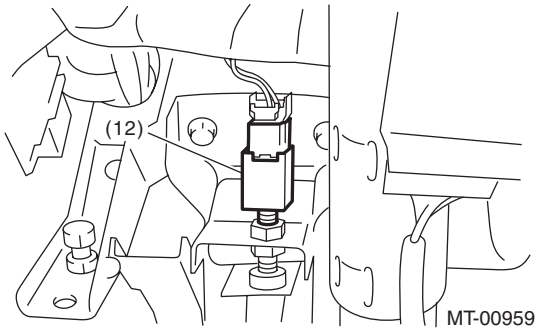
(12)
MT-00959

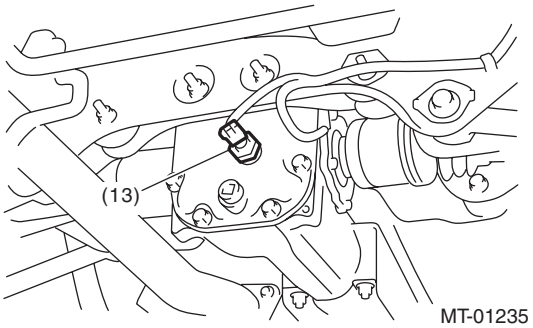
(13)
MT-01235

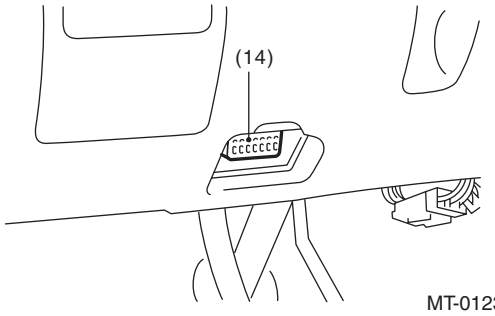
(14)
MT-01236

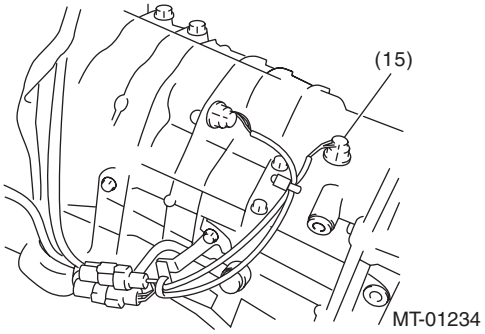
(15)
MT-01234

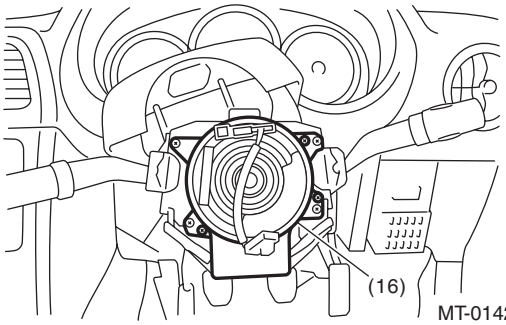
(16)
MT-01426